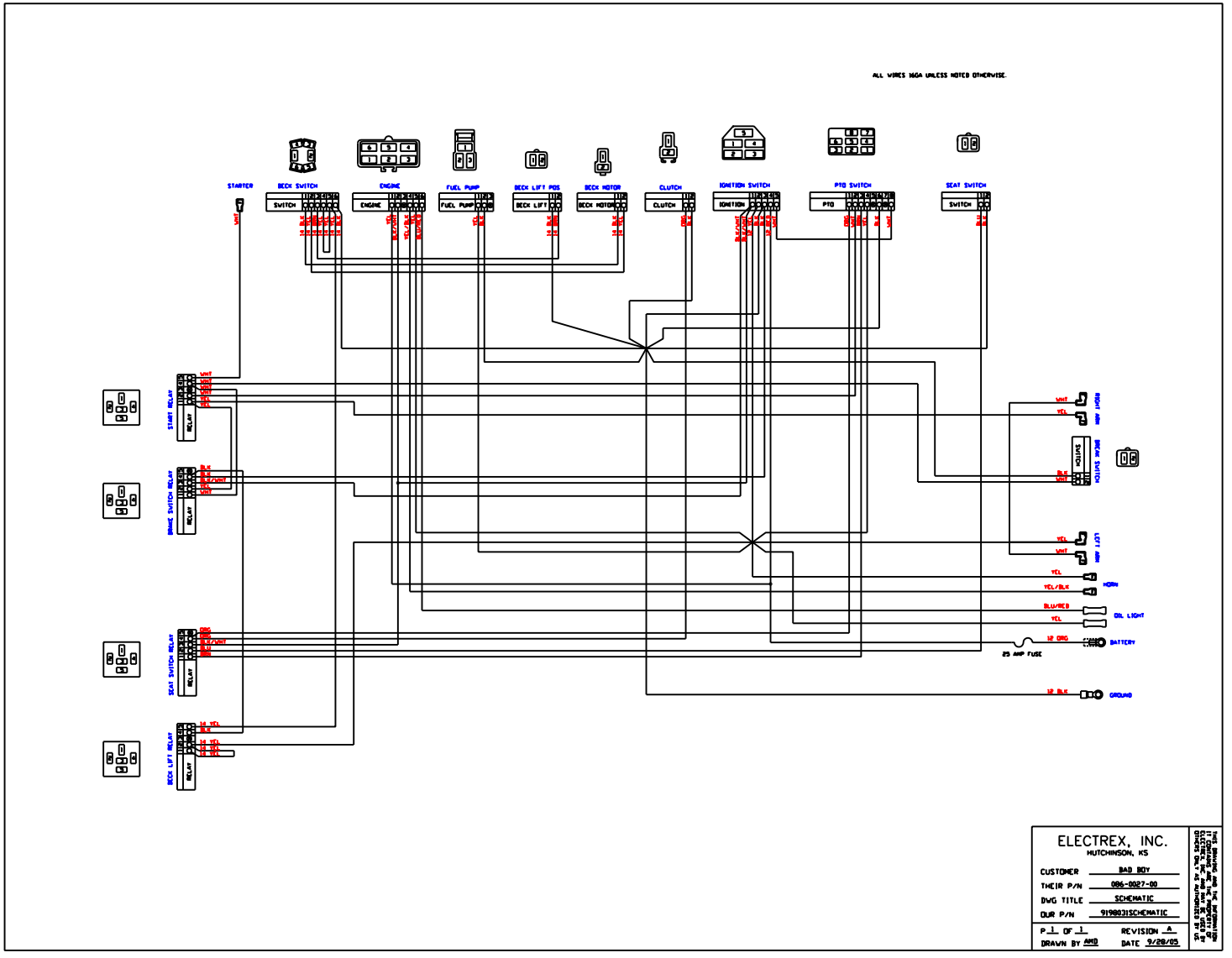
ALL WIRES 16GA UNLESS NOTED OTHERWISE.
STARTER
DECK SWITCH
ENGINE
FUEL PUMP
DECK LIFT POS
DECK MOTOR
CLUTCH
IGNITION SWITCH
PTO SWITCH
SEAT SWITCH
START RELAY
BRAKE SWITCH RELAY
SEAT SWITCH RELAY
DECK LIFT RELAY
RIGHT AMP
BRAKE SWITCH
LEFT AMP
HORN
OIL LIGHT
BATTERY
25 AMP FUSE
GROUND
ELECTREX, INC.
HUTCHINSON, KS
CUSTOMER BAD BOY
THEIR P/N 086-0027-00
DWG TITLE SCHEMATIC
OUR P/N 91980031SCHEMATIC
P 1 OF 1
REVISION A
DRAWN BY AMD
DATE 9/28/05