ELECTRICAL SYSTEM *(CONTINUED)*
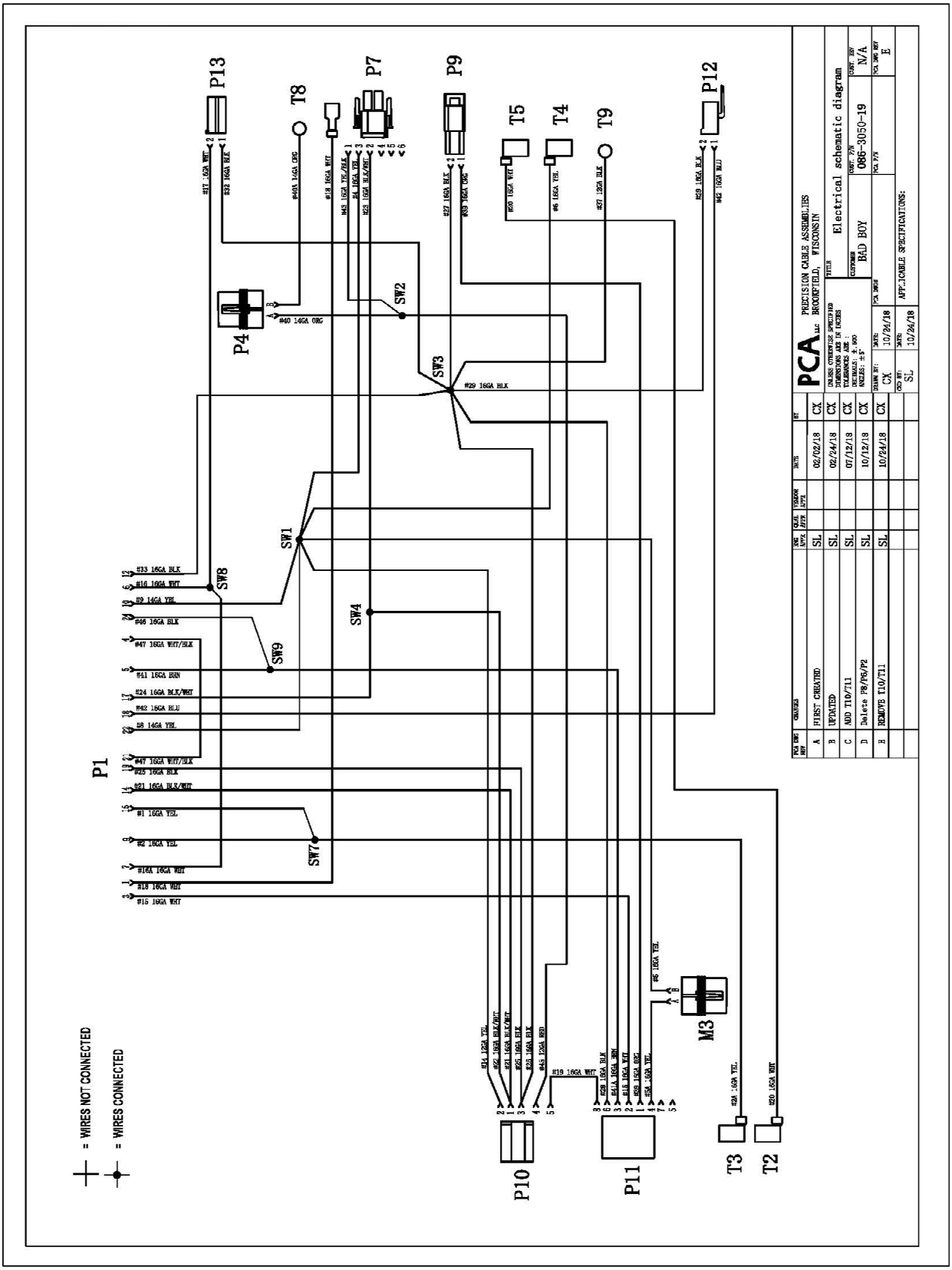
WIRING DIAGRAM