ELECTRICAL SYSTEM *(CONTINUED)*
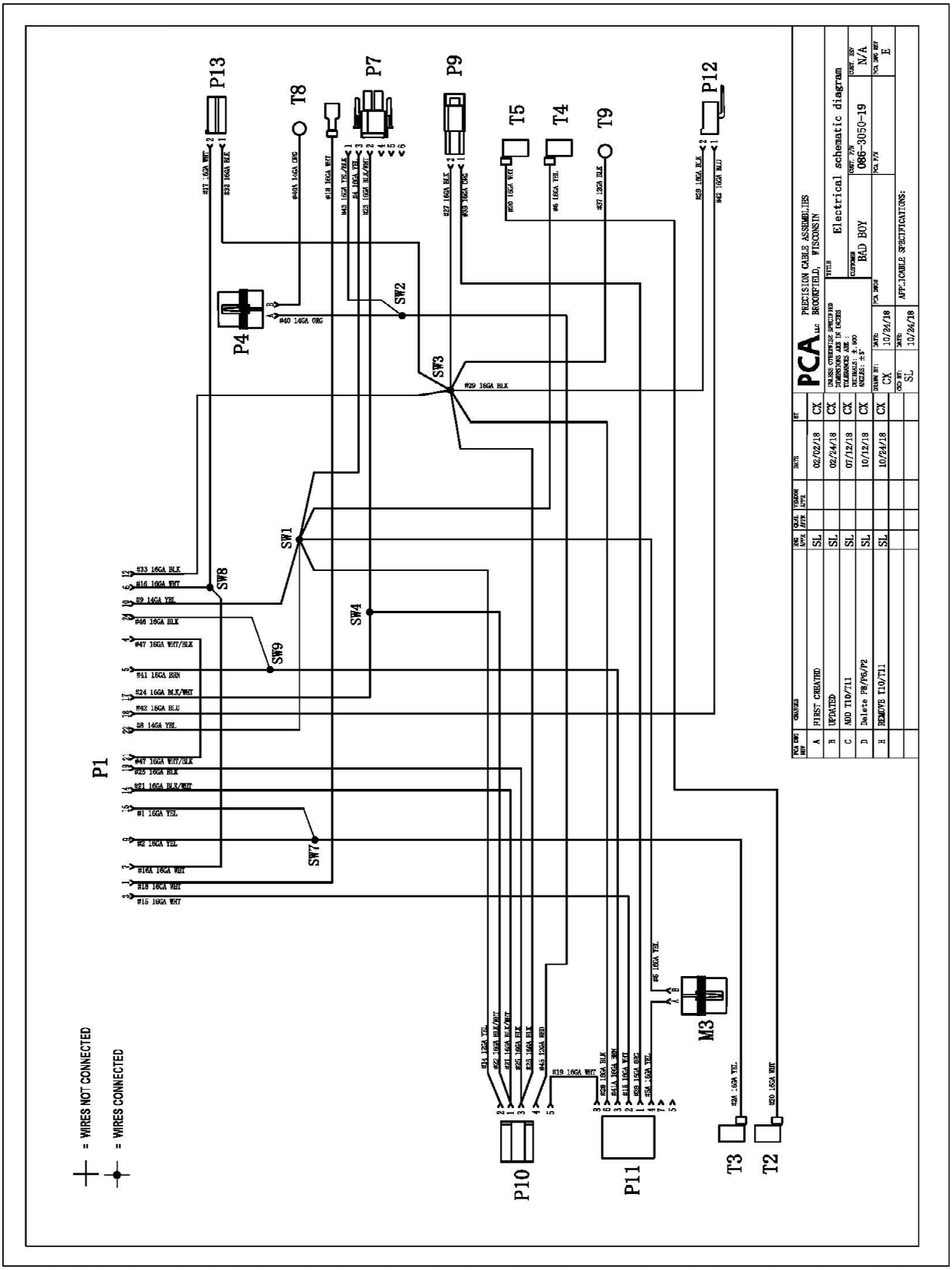
WIRING DIAGRAM (For a larger version of the below diagram please visit badboymowers.com and click the parts manuals section)